天祥电气
TIANXIANG ELECTRIC

PRODUCT
CATALOGUE
NO.18

YANGZHOU TIANXIANG ROAD LAMP EQUIPMENT CO.,LTD
ADD: No. 2, Leju Road, Smart Industrial Park, Songqiao New District, Gaoyou City, Jiangsu
MOB: +86-13905254640
Http: www.txledlighting.com
www.txzmlamp.com
E-mail: jason@txlightinggroup.com

BRIEF INTRODUCTION

Yangzhou TianXiang Road Lamp Equipment Co., Ltd. is located in the smart industrial park of Yangzhou, called "Hometown of Lights". Tianxiang was established in 2008 with a registered capital of 51.58 million. It is a high-tech enterprise specializing in research, development, and production. Our Factory occupies a 62000m^2 workshop with about 108 employees, among that are especially 12 technical engineers. So far we have over 10 patent technologies. And we are certified with ISO9001:2015, ISO14001:2015, ISO45001:2015, CCC, CQC, TUV, and our products comply with CE, ROHS, IEC, SONCAP, TM-21, etc.

Our main products LED Street Lights, LED Solar Street lights, LED Flood Lights, All In One LED Solar Street Lights, LED Garden Lights, and LED Traffic Lights, have served more than 2300 companies and exported to more than 120 countries.

Chairman: Jason

PRODUCTS CERTIFIED

BATTERY CE-1

CB

CE(EMC)

CE(LVD)

CONTROLLER CE

CONTROLLER ROHS

EC

IEC

IK08

IK10

IP66

ROHS

SOLAR PANEL TUV

SOLAR PANEL-CQC

PRODUCTION LINE

Steel plate

P5 Steel panel cutting

Laser cutting

Roll steel pole

Welding

Seam welding

Galvanized

Automatically powder coating color

CONTENTS

SOLAR SYSTEM
SOLAR STREET LIGHT
INTEGRATED SOLAR LIGHT
SOLAR GRADEN LIGHT
LED STREET LIGHT
GRADEN LIGHT
LED FLOOD LIGHT
SMART LIGHTING
MULTI POLE INTEGRATION

Projects of Solar Power Systems

SOLAR PANEL

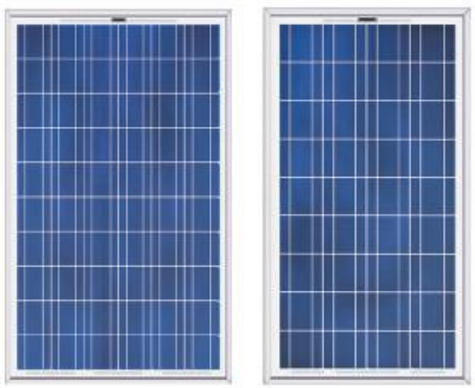

TECHNICAL DATA (40WP-555WP)

Model	Pm(W)	Vmp(V)	Im(A)	Voc(V)	Isc(A)	L*W*H(mm)	Weight(kg)
TX-40WP	40W	18.0	2.23	22.0	2.49	750*350*25	2.6
TX-50WP	50W	18.0	2.86	22.0	2.92	460*670*25	3.0
TX-60WP	60W	18.0	3.35	22.0	3.52	530*670*25	3.6
TX-70WP	70W	18.0	4.11	22.0	4.31	630*670*25	4.2
TX-80WP	80W	18.0	4.46	22.0	4.56	700*670*25	4.7
TX-90WP	90W	18.0	5.12	22.0	5.62	770*670*25	5.3
TX-100WP	100W	18.0	5.56	22.0	5.96	850*670*25	5.8
TX-110WP	110W	18.0	6.24	22.0	6.35	920*670*30	6.3
TX-120WP	120W	18.0	6.67	22.0	6.75	1020*670*30	6.8
TX-130WP	130W	18.0	7.24	22.0	7.64	1120*670*30	7.3
TX-140WP	140W	18.0	7.78	22.0	8.12	1130*670*30	7.8
TX-150WP	150W	18.0	8.43	22.0	8.85	1250*670*30	8.3
TX-160WP	160W	36.0	4.52	42.0	4.67	1330*670*30	8.8
TX-180WP	180W	36.0	5.13	42.0	5.54	1480*670*30	9.8
TX-200WP	200W	36.0	5.61	42.0	6.01	1640*670*35	10.8
TX-220WP	220W	36.0	6.15	42.0	6.23	1240*996*35	11.8
TX-250WP	250W	36.0	6.95	42.0	7.34	1340*996*35	13.7
TX-280WP	280W	36.0	7.86	42.0	7.97	1490*996*35	15.4
TX-300WP	300W	36.0	8.39	42.0	8.45	1650*996*35	16.6
TX-320WP	320W	36.0	8.71	42.0	9.22	1650*996*35	16.6
TX-380WP	380W	36.0	10.55	42.0	10.89	1960*996*35	20.9
TX-400WP	400W	36.8	10.86	46.2	11.2	1960*996*35	20.9
TX-450WP	450W	36.8	12.13	46.2	12.47	2120*1040*35	24.7
TX-540WP	540W	37.2	14.51	46.8	14.85	2279*1134*35	27.5
TX-555WP	555W	37.2	14.81	46.8	15.15	2279*1134*35	27.5

SOLAR LIGHTING SERIES

SPLIT SOLAR STREET LIGHT

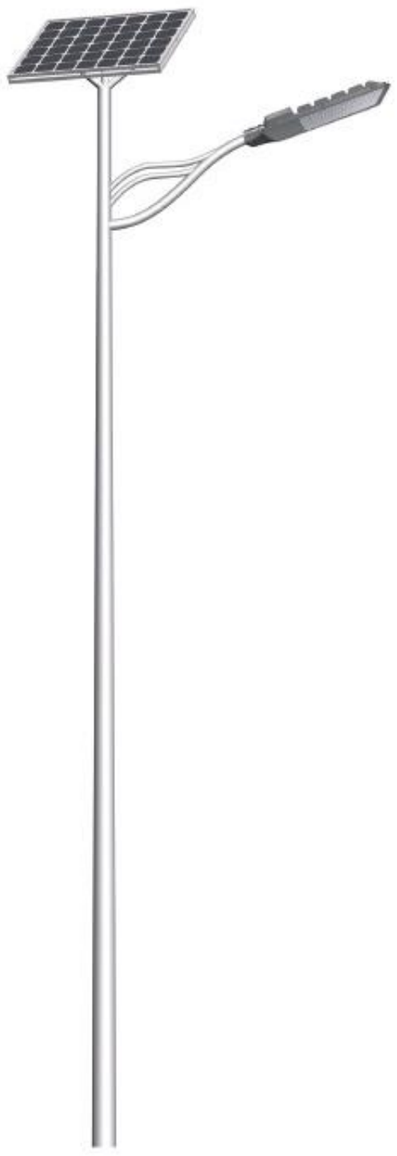

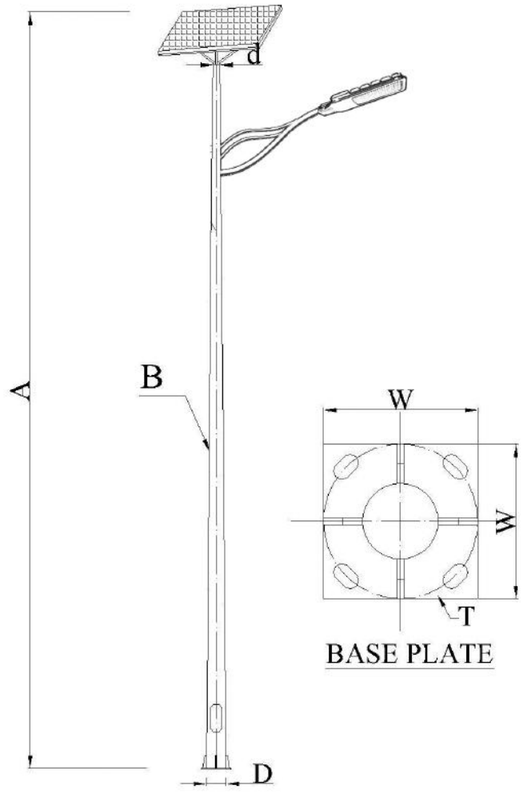

SINGLE ARM SOLAR STREET LIGHT

AC100-305V | CRI >80 | PF >0.95 | 10%~90% | +50℃ -35℃ | 50,000h

No	Item	Picture	Parameters
1	TXLED05 LED Lamp		Power:30W Chip:Lumileds/Bridgelux/Cree/Epistar Lumens:100-120 lm/w Voltage:DC 12V Color Temperature:3000-6500K
2	Solar Panels		Power:90W Nominal Voltage:18V/17.5V Efficiency of Solar Cells:18% Material: Mono Cells/Poly Cells
3	Gel Battery		Capacity:60AH Nominal Voltage:12V
	Lithium Battery		Capacity:40 AH Nominal Voltage:12V
4	Controller		Rated Current:5A Nominal Voltage:12V
5	Pole		Height: 6m(A); Diameter: 60/160mm(d/D); Thickness: 3.0mm(B); Flange Plate:280*14mm(W*T)
6	Anchor Bolt		4-M18
7	Cables	RVV2*2.5	15m
8	Working Time:12 hours per day ,2 days backup		

SPLIT SOLAR STREET LIGHT

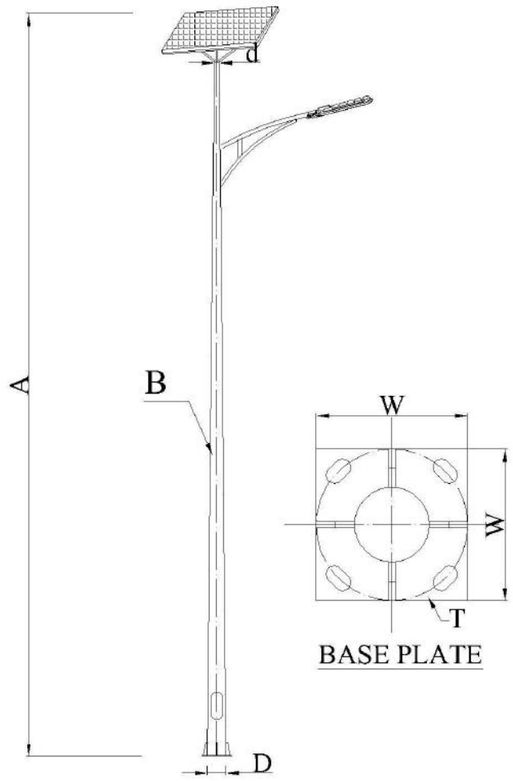

SINGLE ARM SOLAR STREET LIGHT

AC100-305V | CRI >80 | PF >0.95 | 10%~90% | +50℃ -35℃ | 50,000h

No	Item	Picture	Parameters
1	TXLED05 LED Lamp		Power:40W Chip:Lumileds/Bridgelux/Cree/Epistar Lumens:100-120 lm/w Voltage:DC 12V Color Temperature:3000-6500K
2	Solar Panels		Power:120W Nominal Voltage:18V/17.5V Efficiency of Solar Cells:18% Material: Mono Cells/Poly Cells
3	Gel Battery		Capacity:80AH Nominal Voltage:12V
	Lithium Battery		Capacity:54AH Nominal Voltage:12V
4	Controller		Rated Current:10A Nominal Voltage:12V
5	Pole		Height: 7m(A); Diameter: 70/160mm(d/D); Thickness: 3.0mm(B); Flange Plate:320*14mm(W*T)
6	Anchor Bolt		4-M18
7	Cables	RVV2*2.5	18m
8	Working Time:12 hours per day ,2 days backup		

SPLIT SOLAR STREET LIGHT

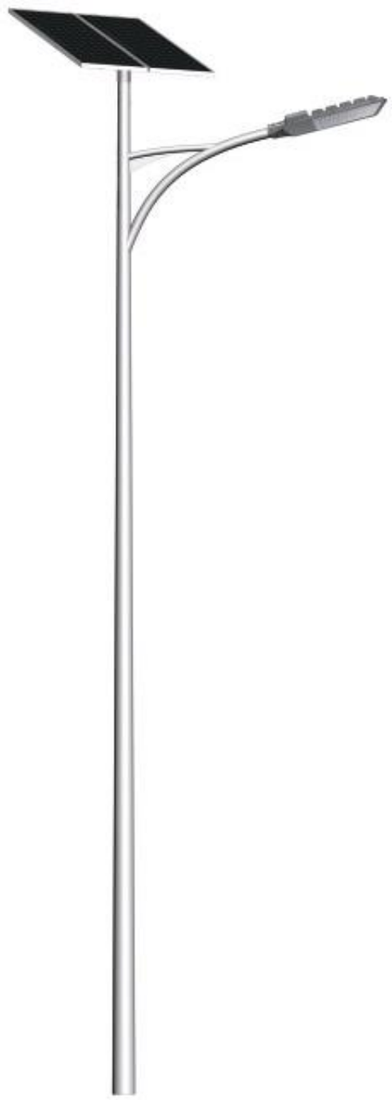

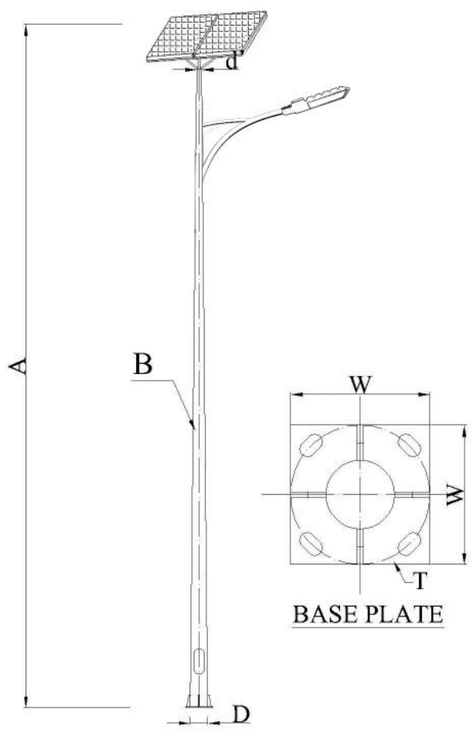

SINGLE ARM SOLAR STREET LIGHT

AC100-305V | CRI >80 | PF >0.95 | 10%~90% | +50℃ -35℃ | 50,000h

No	Item	Picture	Parameters
1	TXLED05 LED Lamp		Power:60W Chip:Lumileds/Bridgelux/Cree/Epistar Lumens:100-120 lm/w Voltage:DC 24V Color Temperature:3000-6500K
2	Solar Panels		Power:90W*2 Nominal Voltage:36V/35V Efficiency of Solar Cells:18% Material: Mono Cells/Poly Cells
3	Gel Battery		Capacity:60AH*2 Nominal Voltage:24V
	Lithium Battery		Capacity:80AH Nominal Voltage:24V
4	Controller		Rated Current:10A Nominal Voltage:24V
5	Pole		Height: 8m(A); Diameter: 80/185mm(d/D); Thickness: 3.5mm(B); Flange Plate:350*16mm(W*T)
6	Anchor Bolt		4-M18
7	Cables	RVV2*2.5	20m
8	Working Time:12 hours per day ,2 days backup		

SPLIT SOLAR STREET LIGHT

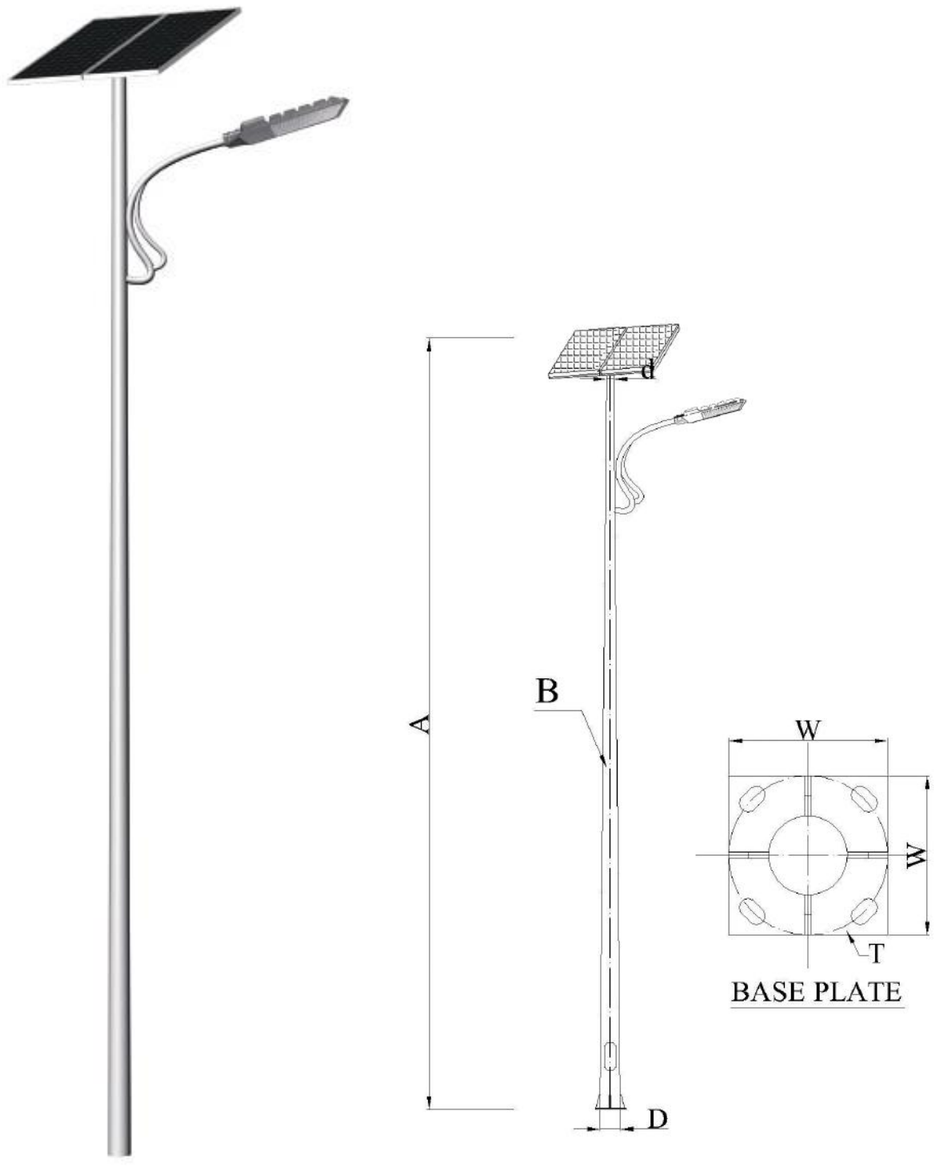

SINGLE ARM SOLAR STREET LIGHT

AC100-305V | CRI >80 | PF >0.95 | 10%~90% | +50℃ -35℃ | 50,000h

No	Item	Picture	Parameters
1	TXLED05 LED Lamp		Power:80W Chip:Lumileds/Bridgelux/Cree/Epistar Lumens:100-120 lm/w Voltage:DC 24V Color Temperature:3000-6500K
2	Solar Panels		Power:120W*2 Nominal Voltage:36V/35V Efficiency of Solar Cells:18% Material: Mono Cells/Poly Cells
3	Gel Battery		Capacity:80AH*2 Nominal Voltage:24V
	Lithium Battery		Capacity:106AH Nominal Voltage:24V
4	Controller		Rated Current:15A Nominal Voltage:24V
5	Pole		Height: 9m(A); Diameter: 80/200mm(d/D); Thickness: 4.0mm(B); Flange Plate:400*18mm(W*T)
6	Anchor Bolt		4-M18
7	Cables	RVV2*2.5	22m
8	Working Time:12 hours per day ,2 days backup		

SPLIT SOLAR STREET LIGHT

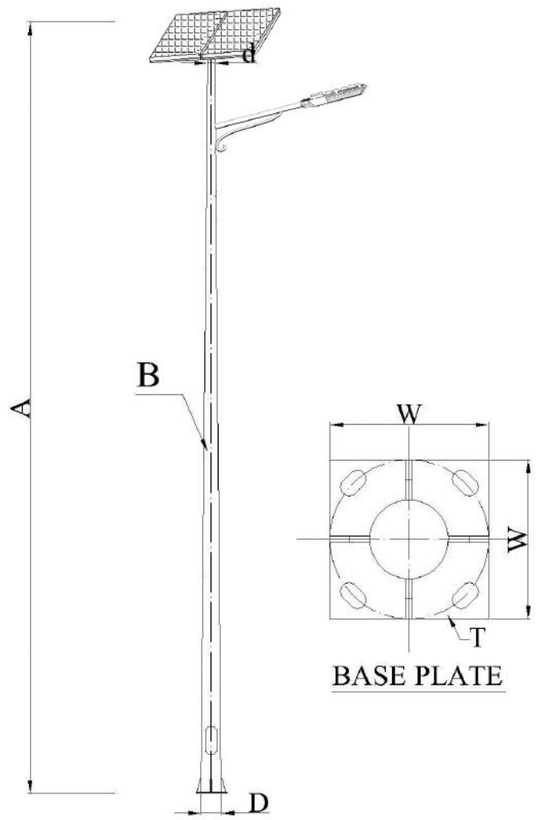

SINGLE ARM SOLAR STREET LIGHT

AC100-305V | CRI >80 | PF >0.95 | 10%~90% | +50℃ -35℃ | 50,000h

No	Item	Picture	Parameters
1	TXLED05 LED Lamp		Power:100W Chip:Lumileds/Bridgelux/Cree/Epistar Lumens:100-120 lm/w Voltage:DC 24V Color Temperature:3000-6500K
2	Solar Panels		Power:150W*2 Nominal Voltage:36V/35V Efficiency of Solar Cells:18% Material: Mono Cells/Poly Cells
3	Gel Battery		Capacity:100AH*2 Nominal Voltage:24V
	Lithium Battery		Capacity:134AH Nominal Voltage:24V
4	Controller		Rated Current:15A Nominal Voltage:24V
5	Pole		Height: 10m(A); Diameter: 90/210mm(d/D); Thickness: 4.0mm(B); Flange Plate:400*20mm(W*T)
6	Anchor Bolt		4-M18
7	Cables	RVV2*2.5	24m
8	Working Time:12 hours per day ,2 days backup		

SOLAR STREET LIGHT

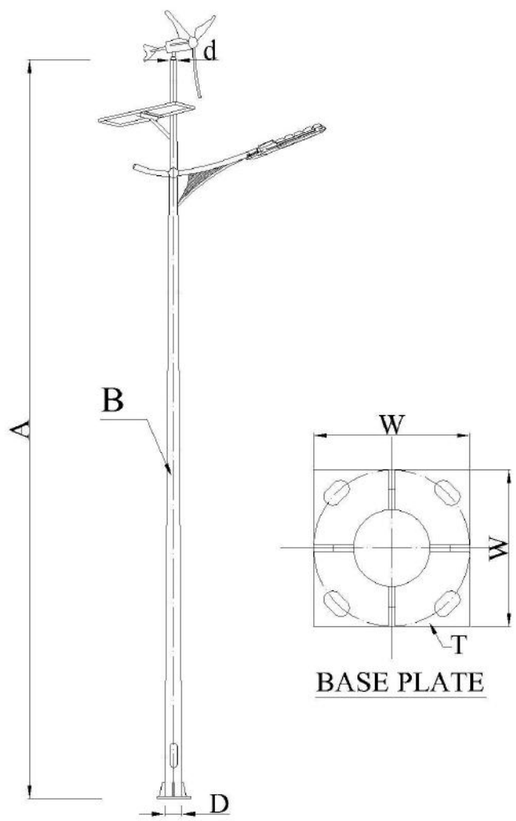

SINGLE ARM SOLAR STREET LIGHT

AC100-305V | CRI >80 | PF >0.95 | 10%~90% | +50℃ -35℃ | 50,000h

No	Item	Picture	Parameters
1	TXLED05 LED Lamp		Power:20W/30W/40W/50W/60W/80W/100W Chip:Lumileds/Bridgelux/Cree/Epistar Lumens:90lm/W Voltage:DC12V/24V ColorTemperature:3000-6500K
2	Solar Panels		Power:40W/60W/2*40W/2*50W/2*60W/2*80W /2*100W Nominal Voltage:18V Efficiency of Solar Cells:18% Material: Mono Cells/Poly Cells
3	Battery (Lithium Battery Available)		Capacity:38AH/65AH/2*38AH/2*50AH/2*65AH/2*90AH/2*100AH Type: Lead-acid / Lithium Battery Nominal Voltage:12V/24V
4	Battery Box		Material: Plastics IP Rating:IP67
5	Controller		Rated Current:5A/10A/15A/15A Nominal Voltage:12V/24V
6	Pole		Height: 5m(A); Diameter: 90/140mm(d/D); Thickness: 3.5mm(B);Flange Plate:240*12mm(W*T)
			Height: 6m(A); Diameter: 100/150mm(d/D); Thickness: 3.5mm(B);Flange Plate:260*12mm(W*T)
			Height: 7m(A); Diameter: 100/160mm(d/D); Thickness: 4mm(B);Flange Plate:280*14mm(W*T)
			Height: 8m(A); Diameter: 100/170mm(d/D); Thickness: 4mm(B);Flange Plate:300*14mm(W*T)
			Height: 9m(A); Diameter: 100/180mm(d/D); Thickness: 4.5mm(B);Flange Plate:350*16mm(W*T)
			Height: 10m(A); Diameter: 110/200mm(d/D); Thickness: 5mm(B);Flange Plate:400*18mm(W*T)
7	Anchor Bolt		4-M16;4-M18;4-M20
8	Cables		18m/21m/24.6m/28.5m/32.4m/36m
8	Wind Turbine		100W Wind Turbine for 20W/30W/40W LED Lamp Rated Voltage:12/24V Packing Size:470*410*330mm Security Wind Speed:35m/s Weight:14kg
			300W Wind Turbine for 50W/60W/80W/100W LED Lamp Rated Voltage:12/24V Security Wind Speed:35m/s G.W:18kg

AUTO CLEAN SOLAR STREET LIGHT

TECHNICAL DATA

AC100-305V | CRI >80 | PF >0.95 | 10%~90% | +50℃ -35℃ | 50,000h

Solar Panel	18V80W	18V80W	18V100W	18V130W
LED Light	30W	40W	60W	80W
Lithium Battery	12.8V 30AH	12.8V 30AH	12.8V 36AH	25.6V 36AH
Specical Function	Automatic Dust Sweeping and Snow Cleaning			
Lumen	160 lm/w			
Controller Current	5A	10A		
LED Chip	LUMILEDS			
LED Lifetime	80000hours			
Viewing Angle	120°			
Working Time	8-10hours per day 3 days back up			
Working Temperature	-30˚C~+70˚C			
Color Temperature	3000-6500K			
Mounting Height	7-8m	7-8m	7-9m	9-10m
Pole Distance	25-30m	25-30m	25-30m	30-35m
Housing Material	Aluminum Alloy			
Product Warranty	3 years			
Product Size	1068*533*60mm	1068*533*60mm	1338*533*60mm	1750*533*60mm

TX SOLAR

All IN ONE SOLAR STREET LIGHT

PRODUCT DETAILS

Focus On Creating High-quality Solar Lights

All IN ONE SOLAR STREET LIGHT

30W 40W 50W 60W

80W 100W

TECHNICAL DATA

AC100-305V | CRI >80 | PF >0.95 | 10%~90% | +50℃ -35℃ | 50,000h

6-8H				
Power	Mono Solar Panel	Lithium Battery LifePO4	Lamp Size	Package Size
30W	60W	12.8V24AH	980*425*60mm	1090*515*200mm
40W	60W	12.8V24AH	980*425*60mm	1090*515*200mm
50W	70W	12.8V30AH	980*460*60mm	1090*550*200mm
60W	80W	12.8V30AH	940*510*60mm	1020*620*200mm
80W	110W	25.6V24AH	1340*510*60mm	1435*620*210mm
100W	120W	25.6V36AH	1380*510*60mm	1480*620*210mm
10H				
Power	Mono Solar Panel	Lithium Battery LifePO4	Lamp Size	Package Size
30W	70W	12.8V30AH	980*460*60mm	1090*550*200mm
40W	70W	12.8V30AH	980*460*60mm	1090*550*200mm
50W	80W	12.8V36AH	940*510*60mm	1020*620*200mm
60W	90W	12.8V36AH	1020*510*60mm	1120*620*200mm
80W	130W	25.6V36AH	1470*510*60mm	1570*620*210mm
100W	140W	25.6V36AH	1590*510*60mm	1690*620*210mm
12H				
Power	Mono Solar Panel	Lithium Battery LifePO4	Lamp Size	Package Size
30W	80W	12.8V36AH	940*510*60mm	1020*620*200mm
40W	80W	12.8V36AH	940*510*60mm	1020*620*200mm
50W	90W	12.8V42AH	1020*510*60mm	1120*620*200mm
60W	100W	12.8V42AH	1240*510*60mm	1340*620*210mm
80W	150W	25.6V36AH	1630*510*60mm	1730*620*210mm
100W	160W	25.6V48AH	1720*510*60mm	1820*620*210mm

MINI INTEGRATED SOLAR LIGHT

A

B

C

D

ELECTRICAL CHARACTERISTICS:

AC100-305V | CRI >80 | PF >0.95 | 10%~90% | +50℃ -35℃ | 50,000h

Model	TX MINI-A	TX MINI-B	TX MINI-C	TX MINI-D
Solar Panel	10W	20W	35W	60W
Lithium Battery	3.2V 12Ah	3.2V 18Ah	3.2V 36Ah	12.8V 30Ah
LED Chips	15pcs,800lm	30pcs,1600lm	60pcs,3200lm	60pcs,6400lm
Controller	3.2V 5A	3.2V 5A	3.2V 5A	3.2V 5A
Charging Time	9-10hours	9-10hours	9-10hours	9-10hours
Lighting Time	6-8hours/day, 3 days	6-8hours/day, 3 days	6-8hours/day, 3 days	6-8hours/day, 3 days
Ray Sensor	<10lux	<10lux	<10lux	<10lux
PIR Sensor	5-8m,120°	5-8m,120°	5-8m,120°	5-8m,120°
Waterproof	IP65	IP65	IP65	IP65
Material	Aluminum	Aluminum	Aluminum	Aluminum
Size	505*235*85mm	640*293*85mm	767*365*105.6mm	790*520*130mm
N.W.	2.3kg	4kg	6.4kg	7.6kg
Temperature Range	-20ºC ~ +70ºC	-20ºC ~ +70ºC	-20ºC ~ +70ºC	-20ºC ~ +70ºC
Warranty	3years	3years	3years	3years

SOLAR GARDEN LIGHT

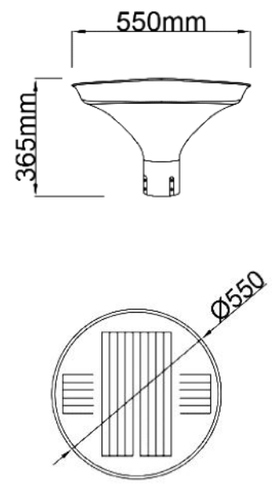

PRODUCT FEATURE

1. A Grade monocrystalline solar panel, high efficiency solar cells. Lifespan reaches more than 25 years.
2. Full-automatic intelligent light control, energy-saving time control.
3. Die-casting alminum light shell.
   Anti-corrosion, Anti-oxidation.
   High-impact PC cover.
4. In areas which are tree-shaded or lack of sunshine, we suggest to use DC&AC complementary controller.
5. High performance battery,
   LifePO4 Lithium battery for your selection.
6. Branded LED chips (Lumileds).
   Lifetime up to 50,000 hours.
7. Easy installation, no cabling, no trenching.
   Labor cost saver, free maintenance.
8. ⩾ 42 working hours after fully charged.

TECHNICAL SPECIFICATION

Product Name	TXSGL-01
Controller	6V 10A
Solar Panel	35W
Lithium Battery	3.2V 24AH
LED Chips Quantity	120pcs
Light Source	2835
Color Temperature	3000-6500K
Housing Material	Die-cast Aluminum
Cover Material	PC
Housing Color	As Customer’s Requirement
Protection Class	IP65
Mounting Diameter Option	Φ76-89mm
Charging Time	9-10hours
Lighting Time	6-8hour/day，3days
Install Height	3-5m
Temperature Range	-25℃/+55℃
Size	550*550*365mm
Product Weight	6.2kg

SOLAR GARDEN LIGHT

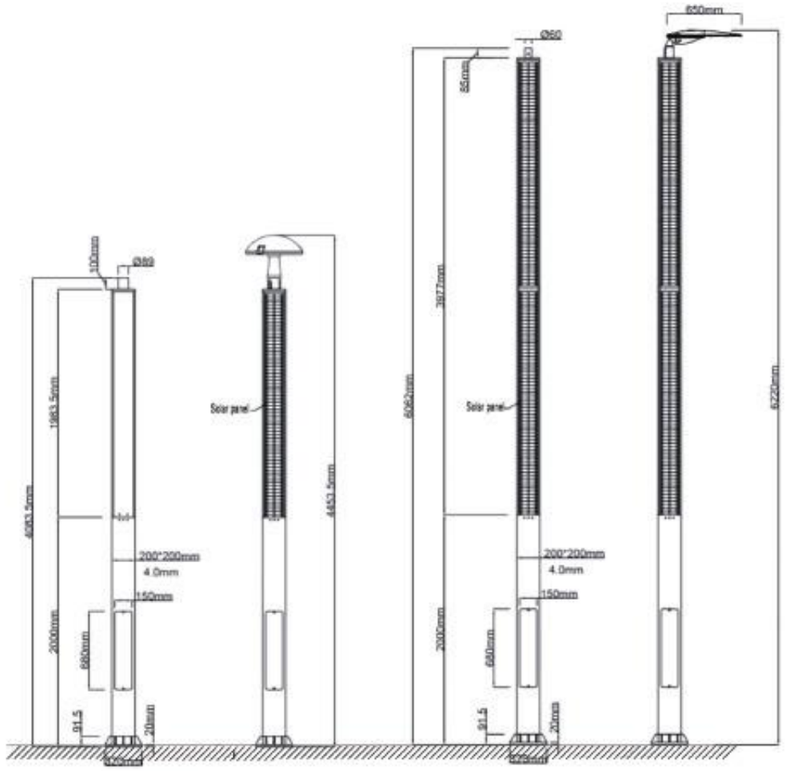

SIMPLIFY INSTALLATION AND MAINTENANCE

There is no need to lay cables. Modular design, plug and play connector, simple installation. Solar panels, lithium iron phosphate batteries and LED lamps have a long service life and save maintenance costs.

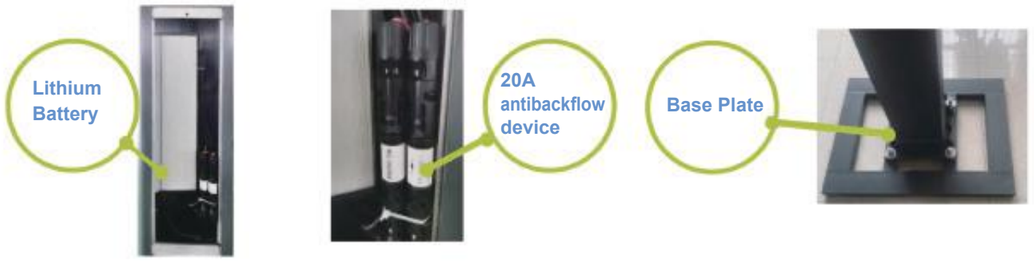

TECHNICAL PARAMETER

		Garden Lighting	Street Lighting
LED Light	Lamp	TX151	TX711
	Maximum Luminous Flux	2000lm	6000lm
	Color Temperature	CRI>70	CRI>70
	Standard Program	6H 100% + 6H 50%	6H 100% + 6H 50%
	LED Lifespan	> 50,000	> 50,000
Lithium Battery	Type	LiFePO4	LiFePO4
	Capacity	60Ah	96Ah
	Cycle Life	>2000 Cycles @ 90% DOD	>2000 Cycles @ 90% DOD
	IP Grade	IP66	IP66
	Operating Temperature	-0 to 60 ºC	-0 to 60 ºC
	Dimension	104 x 156 x470mm	104 x 156 x 660mm
	Weight	8.5Kg	12.8Kg
Solar Panel	Type	Mono-Si	Mono-Si
	Rated Peak Power	240 Wp/23Voc	480 Wp/23Voc
	Efficiency of Solar Cells	16.40%	16.40%
	Quantity	4	8
	Line Connection	Parallel Connection	Parallel Connection
	Lifespan	>15 Years	>15 Years
	Dimension	200 x 200x 1983.5mm	200 x200 x3977mm
Energy Management	Controllable in Every Application Area	Yes	Yes
	Customized Working Program	Yes	Yes
	Extended Working Hours	Yes	Yes
	Rmote Control(LCU)	Yes	Yes
Light Pole	Height	4083.5mm	6062mm
	Size	200*200mm	200*200mm
	Material	Aluminum Alloy	Aluminum Alloy
	Surface Treatment	Spray Powder	Spray Powder
	Anti-theft	Special Lock	Special Lock
	Light Pole Certificate	EN 40-6	EN 40-6
	CE	Yes	Yes

LED STREET LIGHTING

TXLED-10

TXLED-09

TXLED-08

TXLED-07

TXLED-06

TXLED-05

TXLED-103

LED STREET LIGHTING

AC100-305V	CRI >80	PF >0.95	10%~90%	+50℃ -35℃	50,000h

TXLED-10

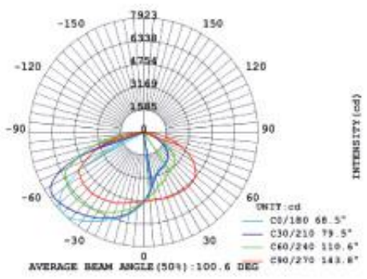

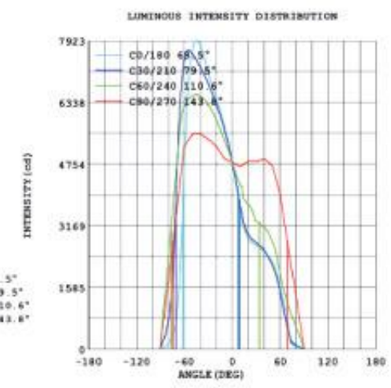

TXLED-10(S)

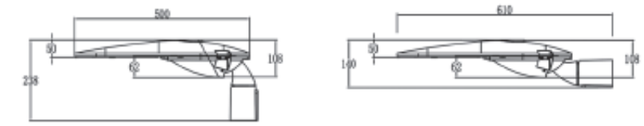

TXLED-10(M)

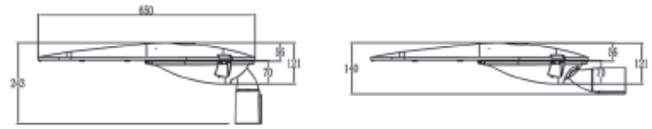

TXLED-10(L)

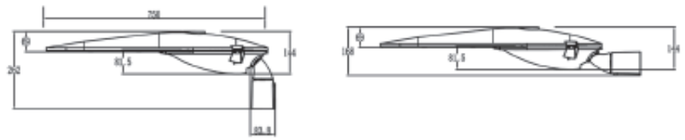

TECHNICAL SPECIFICATION

Product Name	TXLED-10S	TXLED-10M	TXLED-10L
Max Power	90W	150W	240W
LED Chip Quantity	36pcs	64pcs	100pcs
Supply Voltage Range	100-305V AC		
Temperature Range	-25℃/+55℃		
Light Guiding System	PMMA/PC		
Light Source	LUXEON 5050/3030		
Color Temperature	3000-6500K		
Color Rendering Index	>70RA		
Lumen	160 lm/w		
LED Luminous Efficiency	90%		
Lightning Protection	10KV		
Service Life	>50000 Hours		
Housing Material	Die-cast Aluminum		
Sealing Material	Silicone Rubber		
Cover Material	Tempered Glass		
Housing Color	As Customer’s Requirement		
Protection Class	IP66		
Mounting Diameter Pption	Φ60mm		
Suggested Mounting Height	6-9m	9-12m	10-12m
Dimension(L*W*H)	610*270*140mm	765*320*140mm	866*372*168mm

LED STREET LIGHTING

AC100-305V	CRI >80	PF >0.95	10%~90%	+50℃ -35℃	50,000h

TXLED-09

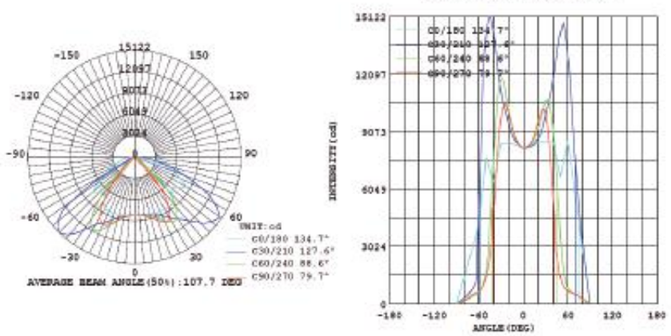

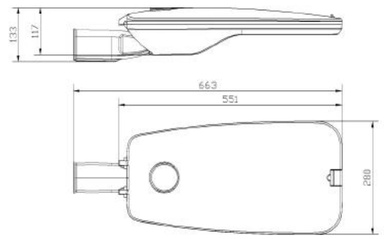

TECHNICAL SPECIFICATION

Product Name	TXLED-09A	TXLED-09B
Max Power	100W	200W
LED Chip Quantity	36pcs	80pcs
Supply Voltage Range	100-305V AC	
Temperature Range	-25℃/+55℃	
Light Guiding System	PC Lens	
Light Source	LUXEON 5050/3030	
Color Temperature	3000-6500K	
Color Rendering Index	>70RA	
Lumen	160 lm/w	
LED Luminous Efficiency	90%	
Lightning Protection	10KV	
Service Life	>50000 Hours	
Housing Material	Die-cast Aluminum	
Sealing Material	Silicone Rubber	
Cover Material	Tempered Glass	
Housing Color	As Customer’s Requirement	
Protection Class	IP66	
Mounting Diameter Pption	Φ60mm	
Suggested Mounting Height	8-10m	10-12m
Dimension(L*W*H)	663*280*133mm	813*351*137mm

LED STREET LIGHTING

AC100-305V	CRI >80	PF >0.95	10%~90%	+50℃ -35℃	50,000h

TXLED-08

30W

40W

50W

60W

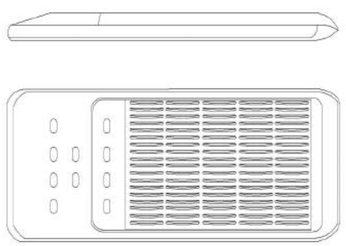

Module quantity	L	W	H
1pc	420	355	80
2pcs	500	355	155
3pcs	580	355	155
4pcs	660	355	155
5pcs	740	355	155
6pcs	820	355	155
7pcs	900	355	155
8pcs	980	355	155
9pcs	1060	355	155
10pcs	1140	355	155

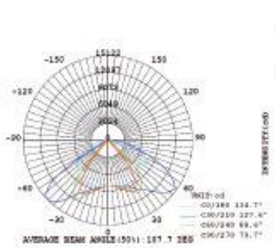

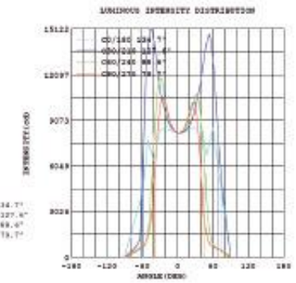

TECHNICAL SPECIFICATION

Product Name	TXLED-08
Max Power	360W
Supply Voltage Range	100-305V AC
Temperature Range	-25℃/+55℃
Light Guiding System	PC lens
Light Source	LUXEON 3030/5050
Color Temperature	3000-6500K
Color Rendering Index	>70RA
Lumen	160 lm/w
LED Luminous Efficiency	90%
Lightning Protection	10KV
Service Life	>50000 Hours
Housing Material	Die-cast Aluminum
Housing Color	As Customer’s Requirement
Protection Class	IP66
Mounting Diameter Option	Φ60mm
Suggested Mounting Height	5-12m

LED STREET LIGHTING

AC100-305V	CRI >80	PF >0.95	10%~90%	+50℃ -35℃	50,000h

TXLED-07

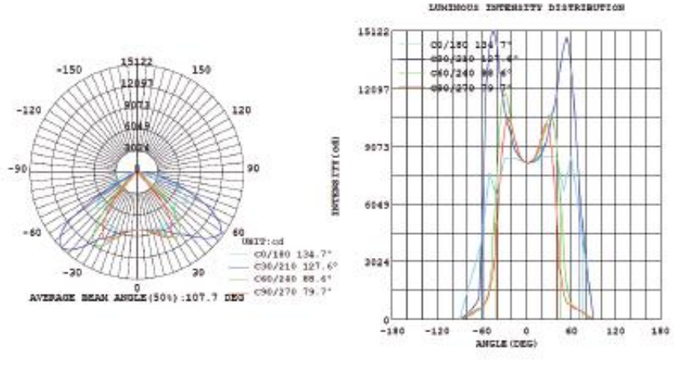

TXLED-07

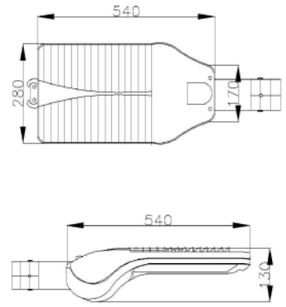

TECHNICAL SPECIFICATION

Product Name	TXLED-07
Max Power	100W
Supply Voltage Range	100-305V AC
Temperature Range	-25℃/+55℃
Light Guiding System	PC lens
Light Source	LUXEON 3030
Color Temperature	3000-6500K
Color Rendering Index	>70RA
Lumen	160 lm/w
LED Luminous Efficiency	90%
Lightning Protection	10KV
Service Life	>50000 Hours
Housing Material	Die-cast Aluminum
Sealing Material	Silicone Rubber
Cover Material	Tempered Glass
Housing Color	As Customer’s Requirement
Protection Class	IP66
Mounting Diameter Option	Φ60mm
Suggested Mounting Height	5-12m
Dimension(L*W*H)	530*280*156mm

LED STREET LIGHTING

AC100-305V	CRI >80	PF >0.95	10%~90%	+50℃ -35℃	50,000h

TXLED-06

30W

40W

50W

60W

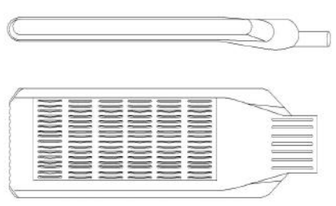

Module quantity	L	W	H
1pc	480	355	155
2pcs	560	355	155
3pcs	640	355	155
4pcs	720	355	155
5pcs	800	355	155
6pcs	880	355	155
7pcs	960	355	155
8pcs	1040	355	155
9pcs	1120	355	155
10pcs	1200	355	155

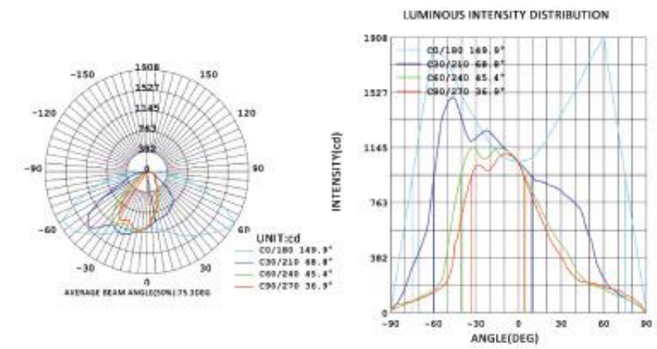

TECHNICAL SPECIFICATION

Product Name	TXLED-06
Max Power	360W
Supply Voltage Range	100-305V AC
Temperature Range	-25℃/+55℃
Light Guiding System	PC lens
Light Source	LUXEON 3030/5050
Color Temperature	3000-6500k
Color Rendering Index	>70RA
Lumen	≥130 lm/w
LED Luminous Efficiency	90%
Lightning Protection	10KV
Service Life	>50000 Hours
Housing Material	Die-cast Aluminum
Housing Color	As Customer’s Requirement
Protection Class	IP66
Mounting Diameter Pption	Φ60mm
Suggested Mounting Height	5-12m

LED STREET LIGHTING

AC100-305V	CRI >80	PF >0.95	10%~90%	+50℃ -35℃	50,000h

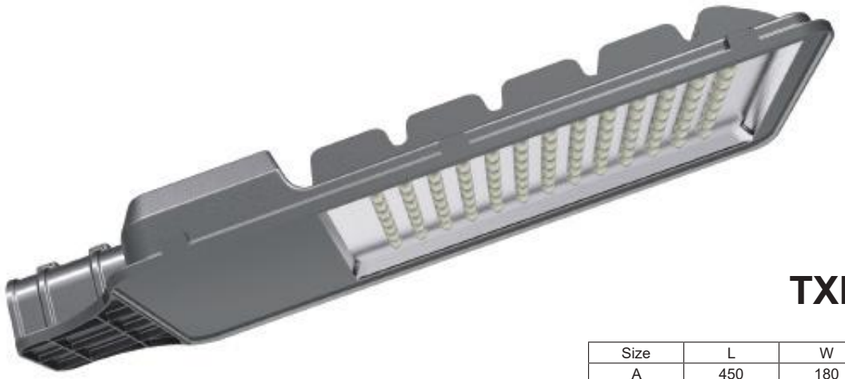

TXLED-05

Size	L	W	H
A	450	180	52
B	550	210	55
C	680	278	80
D	780	278	80
E	975	380	94

TXLED-05(A)

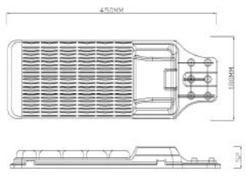

TXLED-05(B)

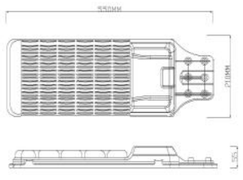

TXLED-05(C)

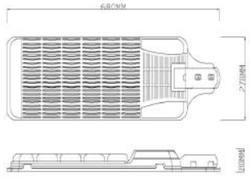

TXLED-05(D)

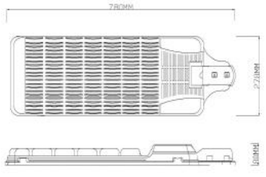

TXLED-05(E)

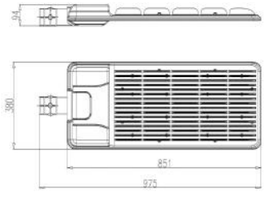

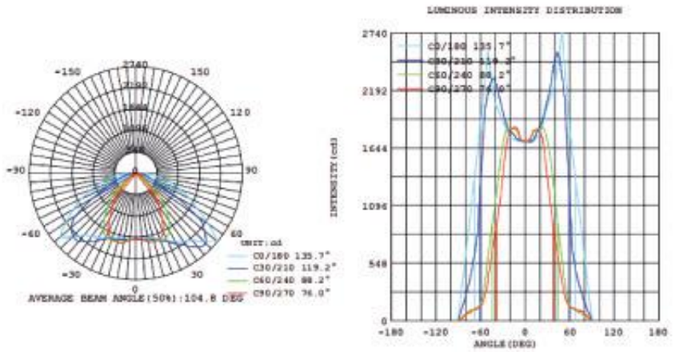

TECHNICAL SPECIFICATION

Product Name	TXLED-05 A/B/C/D/E
Max Power	30W/60W/120W/200W/300W
Supply Voltage Range	100-305V AC
Temperature Range	-25℃/+55℃
Light Guiding System	PC lens
Light Source	LUXEON 3030
Color Temperature	3000-6500K
Color Rendering Index	>70RA
Lumen	160 lm/w
LED Luminous Efficiency	90%
Lightning Protection	10KV
Service Life	>50000 Hours
Housing Material	Die-cast Aluminum
Sealing Material	Silicone Rubber
Cover Material	Tempered Glass
Housing Color	As Customer’s Requirement
Protection Class	IP66
Mounting Diameter Option	Φ60mm
Suggested Mounting Height	5-12m

LED STREET LIGHTING

AC100-305V | CRI >80 | PF >0.95 | 10%~90% | +50℃ -35℃ | 50,000h

TXLED-103

Model	Max power	Max led chip quantity	Size
TXLED-103A	100w	144pcs	422*320*140mm
TXLED-103B	150w	240pcs	522*320*140mm
TXLED-103C	180w	288pcs	600*320*140mm
TXLED-103D	240w	336pcs	700*320*140mm
TXLED-103E	400w	480pcs	853*320*140mm

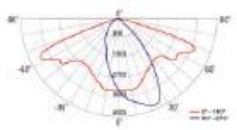

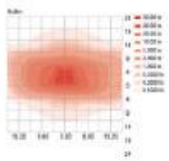

TECHNICAL SPECIFICATION

Product Name	TXLED-103 A/B/C/D/E
Max Power	100W/150W/180W/240W/400W
Supply Voltage Range	100-305V AC
Temperature Range	-25℃/+55℃
Light Guiding System	PC lens
Light Source	LUXEON 3030
Color Temperature	3000-6500K
Color Rendering index	>70RA
Lumen	160 lm/w
LED Luminous Efficiency	90%
Lightning Protection	10KV
Service Life	>50000 Hours
Housing Material	Die-cast Aluminum
Sealing Material	Silicone Rubber
Cover Material	Tempered Glass
Housing Color	As Customer’s Requirement
Protection Class	IP66
Mounting Diameter Option	Φ60mm
Suggested Mounting Height	5-12m

LED STREET LIGHT POLE DESIGN

DG-001

DG-002

DG-003

DG-004

DG-005

DG-006

DG-007

DG-008

DG-009

DG-010

DG-011

DG-012

DG-013

DG-014

DG-015

DG-016

LED STREET LIGHT POLE DESIGN

DG-017

DG-018

DG-019

DG-020

DG-021

DG-022

DG-023

DG-024

DG-025

DG-026

DG-027

DG-028

DG-029

DG-030

DG-031

DG-032

LED FLOOD LIGHT POLE DESIGN

DG-033

DG-034

DG-035

DG-036

DG-037

DG-038

DG-39

DG-040

DG-041

DG-042

DG-043

DG-044

DG-045

DG-046

DG-047

DG-048

GARDEN LIGHT

TXGL-01

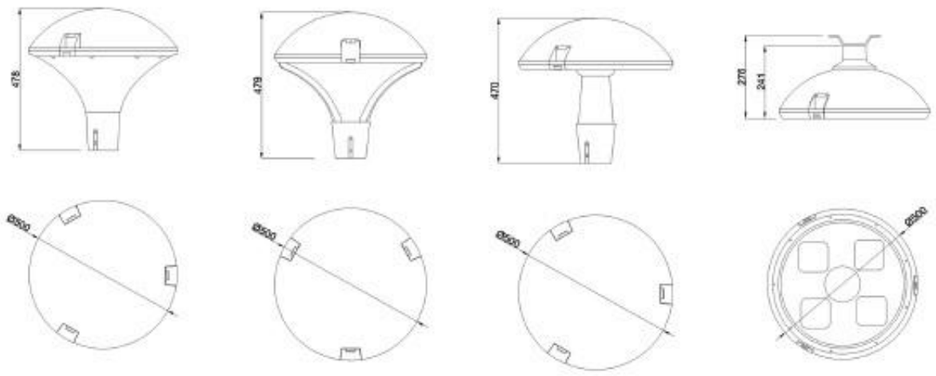

TECHNICAL SPECIFICATION

Product Name	TXGL-01 A/B/C/D
Max Power	120W
Supply Voltage Range	100-305V AC
Temperature Range	-25℃/+55℃
Light Guiding System	PC Lenses
Light Source	LUXEON 5050/3030
Color Temperature	3000-6500K
Color Rendering Index	>80RA
Lumen	≥110 lm/w
LED Luminous Efficiency	90%
Lightning Protection	10KV
Service Life	Min 50000 hours
Housing Material	Die-cast Aluminum
Sealing Material	Silicone Rubber
Cover Material	PC
Housing Color	As Customer’s Requirement
Protection Class	IP66
Mounting Diameter Option	Φ76-89mm
Suggested Mounting Height	3-8m
Dimension(L*W*H)	500*500*478/500*500*479/500*500*470/500*500*278mm
Net Weight	9.2kg/9kg/8.4kg/7.7kg

GARDEN LIGHT

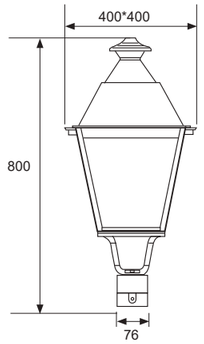

TXGL-101

TECHNICAL SPECIFICATION

Product Name	TXGL-101
Max Power	120W
Supply Voltage Range	100-305V AC
Temperature Range	-25℃/+55℃
Light Guiding System	PC Lenses
Light Source	LUXEON 3030
Color Temperature	3000-6500K
Color Rendering Index	>80RA
Lumen	≥110 lm/w
LED Luminous Efficiency	90%
Lightning Protection	10KV
Service Life	Min 50000 hours
Housing Material	Die-cast Aluminum
Sealing Material	Silicone Rubber
Cover Material	PC
Housing Color	As Customer’s Requirement
Protection Class	IP66
Mounting Diameter Option	Φ60-76mm
Suggested Mounting Height	3-10m
Dimension(L*W*H)	400*400*800mm
Net Weight	7.7kg

GARDEN LIGHT

TXGL-102

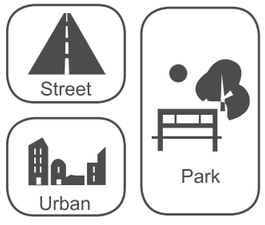

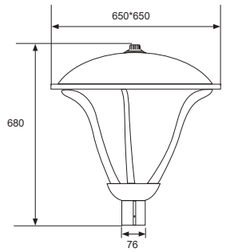

TECHNICAL SPECIFICATION

Product Name	TXGL-102
Max Power	120W
Supply Voltage Range	100-305V AC
Temperature Range	-25℃/+55℃
Light Guiding System	PC Lenses
Light Source	LUXEON 3030
Color Temperature	3000-6500K
Color Rendering index	>80RA
Lumen	≥110 lm/w
LED Luminous Efficiency	90%
Lightning Protection	10KV
Service Life	Min 50000 hours
Housing Material	Die-cast Aluminum
Sealing Material	Silicone Rubber
Cover Material	PC
Hosing Color	As Customer’s Requirement
Protection Class	IP66
Mounting Diameter Option	Φ76mm
Suggested Mounting Height	3-10m
Dimension(L*W*H)	650*650*680mm
Net Weight	13.5kg

GARDEN LIGHT

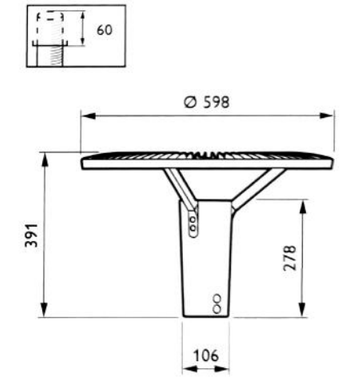

TXGL-104

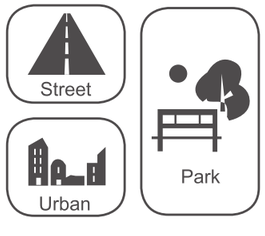

TECHNICAL SPECIFICATION

Product Name	TXGL-104
Max Power	60W
LED Chip Quantity	72pcs
Supply Voltage Range	100-305VAC
Temperature Range	-25℃/+55℃
Light Source	LUXEON 3030
Color Temperature	3000-6500K
Color Rendering Index	>80RA
Lumen	≥110 lm/w
LED Luminous Efficiency	90%
Lightning Protection	10KV
Service Life	Min 50000 hours
Housing Material	Die-cast Aluminum
Sealing Material	Silicone Rubber
Cover Material	PC
Hosing Color	As Customer’s Requirement
Protection Class	IP66
Mounting Diameter Option	Φ60-76mm
Suggested Mounting Height	3-7m
Dimension(L*W*H)	598*598*391mm
Net Weight	7kg

HIGHLIGHT WATERPROOF
BORN FOR THE LIGHTING OF THE COURT

TRANSPARENT PC LENS

Transparent PC lampshade has high light transmittance flame retardancy and wear resistance, and strong oxidation resistance. All kinds of harsh environments can maintain normal operation

PURE ALUMINUM SHELL

High quality pure aluminum, professional treatment fadeless, corrosion resistance

RADIATOR

Light weight, small size, close contact between base plate and light source, innovative air convection
Optimized air duct, stable heat dissipation performance

AC100-305V | CRI >80 | PF >0.95 | 10%~90% | +50℃ -35℃ | 50,000h

1 module

2 modules

3 modules

4 modules-A

4 modules-B

TECHNICAL DATA

	1 module	2 modules	3 modules	4 modules-A	4 modules-B
Power	300-500W	800-1000W	1500W	2000W	2000W
Netweight	6.36KG	9.89KG	15.36KG	22.83KG	20.49KG
Weight	7.5KG	10.89KG	17.06KG	24.53KG	23.65KG
Lampbody Size	280*280*205 mm	490*280*205 mm	735*280*205 mm	575*490*205 mm	895*280*205 mm
Package Size	420*400*305 mm	520*420*305 mm			
Aluminum Substrate(group] [10 series and 52 parallel	16	32	48	64	64

BREAKTHROUGH DESIGNOUTSTANDING AND MORE EXCITING

TRANSPARENT PC LENS

Transparent PC lampshade has high light transmittance, flame retardancy and wear resistance, and strong oxidation resistance. All kinds of harsh environments can maintain normaloperation

FIN ALUMINUM SHELL

High quality pure aluminum, professional treatment, fadeless.corrosion resistance

RADIATOR

Light weight, small size, close contact between baseplate and light source, innovative air convection Optimized air duct, stable heat dissipation performance

AC100-305V | CRI >80 | PF >0.95 | 10%~90% | +50℃ -35℃ | 50,000h

1 module

2 modules

3 modules

4 modules

5 modules

6 modules

8 modules

TECHNICAL DATA

	250W/300W 1 module	500W/600W 2 modules	750W/900W 3 modules	1000W/1200W 4 modules	1250W/1500W 5 modules	1500W/1800W 6 modules	2000W/2400W 8 modules
Lamp Bead Model	3030 5050	3030 5050	3030 5050	3030 5050	3030 5050	3030 5050	3030 5050
Series-parallel Mode	7 series and 48 parallel 6 series and 16 parallel						
Shell Weight	4.09KG	6.49KG	9.00KG	11.35KG	13.82KG	16.25KG	22.06KG
Overall Lamp Size	123*580*138 mm	250*580*138 mm	378*580*138 mm	505*580*138 mm	632*580*138 mm	760*580*138 mm	1013*580*138 mm
Package Size	605*225*160 mm	605*310*160 mm	605*455*160 mm	605*580*160 mm	715*605*160 mm	840*605*160 mm	910*605*160 mm
Protection Grade	IP65	IP65	IP65	IP65	IP65	IP65	IP65
Lens Angle	20° 60° 90°	20° 60° 90°	20° 60° 90°	20° 60° 90°	20° 60° 90°	20° 60° 90°	20° 60° 90°

LED FLOOD LIGHTING

AC100-305V	CRI >80	PF >0.95	10%~90%	+50℃ -35℃	50,000h

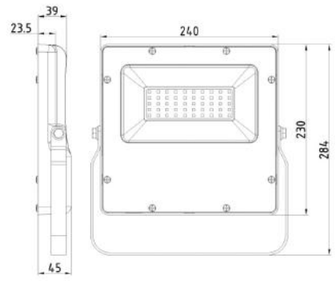

TECHNICAL DATA

Max Power	50W
Size	240*284*45mm
N.W	2.35KG
LED Driver	MEANWELL/PHILIPS/ORDINARY BRAND
LED Chip	LUMILEDS/BRIDGELUX/EPRISTAR/CREE
Material	Die-casting Aluminum
Light Luminous Efficiency	>100 lm/W
Uniformity	>0.8
LED Luminous Efficiency	>90%
Color Temperature	3000-6500K
Color Rendering Index	Ra>80
Input Voltage	AC100-305V
Power Factor	>0.95
Working Environment	-60℃~70℃
IP Rating	IP65
Working Life	>50000hours

AC100-305V	CRI >80	PF >0.95	10%~90%	+50℃ -35℃	50,000h

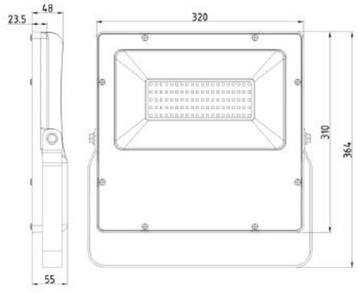

TECHNICAL DATA

Max Power	100W
Size	320*364*55mm
N.W	4.8KG
LED Driver	MEANWELL/PHILIPS/ORDINARY BRAND
LED Chip	LUMILEDS/BRIDGELUX/EPRISTAR/CREE
Material	Die-casting Aluminum
Light Luminous Efficiency	>100 lm/W
Uniformity	>0.8
LED Luminous Efficiency	>90%
Color Temperature	3000-6500K
Color Rendering Index	Ra>80
Input Voltage	AC100-305V
Power Factor	>0.95
Working Environment	-60℃~70℃
IP Rating	IP65
Working Life	>50000hours

LED FLOOD LIGHTING

AC100-305V	CRI >80	PF >0.95	10%~90%	+50℃ -35℃	50,000h

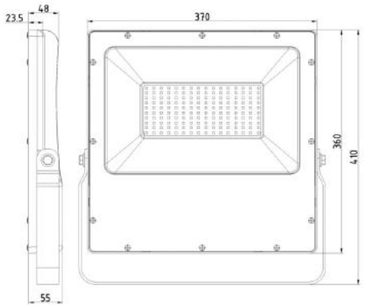

TECHNICAL DATA

Max Power	150W
Size	370*410*55mm
N.W	6KG
LED Driver	MEANWELL/PHILIPS/ORDINARY BRAND
LED Chip	LUMILEDS/BRIDGELUX/EPRISTAR/CREE
Material	Die-casting Aluminum
Light Luminous Efficiency	>100 lm/W
Uniformity	>0.8
LED Luminous Efficiency	>90%
Color Temperature	3000-6500K
Color Rendering Index	Ra>80
Input Voltage	AC100-305V
Power Factor	>0.95
Working Environment	-60℃~70℃
IP Rating	IP65
Working Life	>50000hours

AC100-305V	CRI >80	PF >0.95	10%~90%	+50℃ -35℃	50,000h

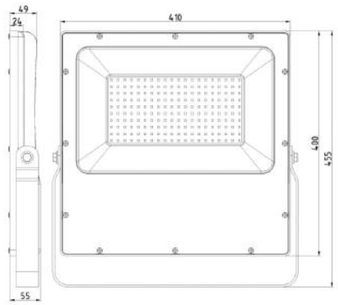

TECHNICAL DATA

Max Power	200W
Size	455*410*55mm
N.W	7.1KG
LED Driver	MEANWELL/PHILIPS/ORDINARY BRAND
LED Chip	LUMILEDS/BRIDGELUX/EPRISTAR/CREE
Material	Die-casting Aluminum
Light Luminous Efficiency	>100 lm/W
Uniformity	>0.8
LED Luminous Efficiency	>90%
Color Temperature	3000-6500K
Color Rendering Index	Ra>80
Input Voltage	AC100-305V
Power Factor	>0.95
Working Environment	-60℃~70℃
IP Rating	IP65
Working Life	>50000hours

LED FLOOD LIGHTING

AC100-305V | CRI >80 | PF >0.95 | 10%~90% | +50℃ -35℃ | 50,000h

TXFL08

TECHNICAL DATA

Max Power	360W
LED Driver	MEANWELL/PHILIPS/ORDINARY BRAND
LED Chip	BRIDGELUX/EPRISTAR/CREE/PHILIPS
Material	die-casting Aluminum
Light Luminous Efficiency	120 lm/w
Uniformity	>0.8
LED Luminous Efficiency	>90%
Color Temperature	3000-6500K
Color Rendering Index	Ra>80
Input Voltage	AC100-305V
Power Factor	>0.95
Working Environment	-60℃~70℃
IP Rating	IP65
Working Life	>50000hours
Warranty	5years
Install Height of Pole	3-15meter

AC100-305V | CRI >80 | PF >0.95 | 10%~90% | +50℃ -35℃ | 50,000h

TXFL10

TECHNICAL DATA

Max Power	1000W
LED Driver	MEANWELL/PHILIPS/ORDINARY BRAND
LED Chip	LUMILEDS/BRIDGELUX/EPRISTAR/CREE
Material	die-casting Aluminum
Lumen	>110lm/W
Uniformity	>0.8
LED Luminous Efficiency	>90%
Color Temperature	3000-6500K
Color Rendering index	Ra>80
Input Voltage	AC100-305V
Power Factor	>0.95
Working Environment	-60℃~70℃
IP Rating	IP65
Working Life	>50000hours

LED FLOOD LIGHTING

AC100-305V | CRI >80 | PF >0.95 | 10%~90% | +50℃ -35℃ | 50,000h

TX-FS01

TX-FS01-S

TX-FS01-M

TECHNICAL DATA

Model	TX-FS01-S	TX-FS01-M
Type of Light Source	LED	
Light Source	OSRAM/CREE/PHILIPS	
Power	25W(Max)(9PCS)	60W(Max)(16PCS)
Color Temperature	RGBW/WHITE	
Size	130*130*105mm	190*190*130mm
Beam Angle	6°~60°	
Material of Lamp Body	ADC12	
Lampshade Material	4mm thick high strength tempered glass	
Protection Level	IP66/IK08	
Working Voltage	DC 24 V or AC 110 ~ 277 V	
Drive Type	Built in constant voltage or constant current power supply	
Luminous Flux	2560Lm (4000K)	6180Lm (4000K)
Power Factor	>0.9	
Control and Others	DMX512	
Operation Life	35000h	
Lamp Outlet	One in one out signal, one in power	
Surface Treatment	Electrostatic spraying, anti UV	

SOLAR LED FLOOD LIGHTING

TECHNICAL DATA

Model	TXSFL-25W	TXSFL-40W	TXSFL-60W	TXSFL-100W
Application Place	Highway/Community/Villa/Square/Park and etc.			
Power	25W	40W	60W	100W
Luminous Flux	2500LM	4000LM	6000LM	10000LM
Light Effect	100LM/W			
Charging Time	4-5H			
Lighting Time	Full power can be illuminated for more than 24 hours			
Lighting Area	50m²	80m²	160m²	180m²
Sensing Range	180° 5-8 meters			
Solar Panel	6V/10W POLY	6V/15W POLY	6V/25W POLY	6V/25W POLY
Battery Capacity	3.2V/6500mA lithium iron phosphate battery	3.2V/13000mA lithium iron phosphate battery	3.2V/26000mA lithium iron phosphate battery	3.2V/32500mA lithium iron phosphate battery
Chip	SMD5730 40PCS	SMD5730 80PCS	SMD5730 121PCS	SMD5730 180PCS
Color Temperature	3000-6500K			
Material	Die-cast aluminum			
Beam Angle	120°			
Waterproof	IP66			
Product Features	Infrared remote control board + light control			
Color Rendering Index	>80			
Operating Temperature	-20 to 50 ℃			

TX SOLAR

SMART STREET LAMP

PRODUCT FEATURES

- Advanced configuration

Can Be equipped with remote switch, real-time dimming, timing switch, timing dimming and other functions, really achieve intelligent management of street lights;

- Options are well-equipped

Intelligent lighting products cover all application scenarios, functional applications to achieve menu-style Selection;

- It's got a lot of options

The excellent design team of the product appearance company is carefully built to fully meet the application needs of projects at home and abroad.

Smart Street lamp products

5G

SPECIFICATION

No.	Item	Name	Model	Technical parameters	QTY	Units	Remark
1	Intelligent lighting	Smart city platform software	V1.0	Lighting control system, advertising release, video monitoring, environmental monitoring system, WIFI management, charging pile management system, broadcast system, emergency call system	1	set	Cloud /local deployment
		Single modulation controller	TX10-R1A-M	IP65 waterproof, a dimming output, a single lamp current, voltage, power, broken lamp detection function	1	set	zigbee/ Lora/NB optional
2	Environmental monitoring equipment	Meteorological sensor	TX10-FRT-S1A	Ten in one: humidity, air pressure, wind speed, wind direction temperature, decibel, PM2.5, PM10, rainfall radiation	1	set	
3	WIFI cover system	WIFI-AP facility	TX10-MX-AP	Frequency: 2.4 GHz Can be equipped with a variety of outdoor antenna seamless roaming, load balancing 500MW power, 300Mbps transmission rate, Chinese SSID support VLAN isolation Coverage of 100 meters, concurrent access to 100 points Support 2 N - port antenna interface	1	set	
		WIFI-AC facility	TX10-MX-AC	The 128 pcs AP centralized control platform is based on embedded architecture,, to realize multi-service high-speed forwarding Support the IEEE802.11 a/b/g and Standard IEEE802.11 n Realize centralized access and centralized deployment of AP	1	set	
4	Video monitoring system	High-definition camera	TX10-HK-S5A	7" ball machine, 300W pixels Support up to 2048×1536@30fps HD picture output Support 960p-60fps, 720p-60fps high frame rate output Support 360° horizontal rotation, vertical direction-15 ° to 90 ° Support 300 preset, 8 cruise scan support Haikang SDK, ONVIF, CGI, PSIA GB/T28181, E family protocol and fluorite cloud access lightning protection, anti-surge, anti-surge, IP66 protection level Support 1 way audio input and 1 way audio output Built-in 2 alarm input and 1 alarm output, support alarm linkage function	1	set	7" ball machine
		Camera holder	TX10-HK-F01	wall mounting bracket, outer wall mounting, outline size: 97×182×305mm, weight: 1070g	1	set	
5	Emergency call system	One - button call terminal equipment	TX10-SR-S1A	HD camera, active real-time monitoring,720P CMOS camera Full duplex voice intercom, audio code: G. 711 G713, PCM, 3 m distance intercom, speaker: 8 Ω 3 w Dynamic noise reduction, clear sound pickup, signal-to-noise ratio >85db outdoor rain protection, IP52. RJ45 interface, support TCP/IP, DHCP	1	set	
		Speakers	TX10-SR-F01	Theory power 1.4 W x 2 impedance 4 Ω SNR>80 Sensitivity 450 + 50 mv	1	set	
		Goose neck microphone	TX10-SR-F02	Use for network call microphone input	1	set	

No.	Item	Name	Model	Technical parameters	QTY	Units	Remark
6	Audio playback system	IP speaker	TX10-NAS-S1A	Rated power: 30W, input power: 24V, audio input sensitivity: 0.775v Frequency response: 50hz-15khz (±3dB) Size: 450 * 88.1 * 83.2	1	set	
		Broadcast calling host	TX10-NAS-S1B	Built-in loudspeaker and microphone, can restore remote sound and collect on-site sound True color LCD displays the login status, volume value, partition list and other relevant information Input power specification DC12V 2A	1	set	
7	Green Charging system	Charging pile	TX10-TLE-S1A	Installation form: embedded installation;Working environment temperature: -30℃ ~ +50℃ Input voltage: AC220V±10%;Charging mode single charge Total power: 7kW; Machine performance: efficiency ≥99% Startup mode: swipe card, APP scan code: protection level ≥IP54	1	set	
8	Advertising system	LED Full color screen	TX10-LCF-S3A	Rated current: 40 (mA) Rated voltage: 5 (V) module size: 256*128 (mm) Size: 740*512 environment: outdoor	1	set	outdoor 4-8m
		Full color control board card	TX10-LCF-F01	Full color control card/support LED screen P2.5 / P4, P5 / P10	1	set	
9	Poly box	Switch + concentrator	TX10-GW-ZH	IEEE 802.3、IEEE 802.3u、IEEE 802.3l、IEEE 802.3z、IEEE 802.3at Total backplate bandwidth: 20Gbps Packet forwarding rate: 14.88mpps Size: 143 x 104 x 48mm (width x depth x height) Weight: 0.85 Kg	1	set	The company jubogen supports point-to-point access, Ring network is not supported
10	Accessories			Control box, lightning protection module, optical fiber jumper, connection wire, power supply, auxiliary materials, wiring line	1	set	
11	After-sales service	Technical commissioning/ after sales		1.Provide free warranty service for the product. The warranty period shall be one year from the date of product acceptance and official operation 2. Upon the expiration of the warranty period, the maintenance service shall continue to be provided according to the notice of the demander 3.Provide product debugging, training and other after-sales services 4,within 24 hours to respond to product failure, or need to replace components and accessories, and as soon as possible to send technology remote or on-site maintenance or provide technical support	1	set	

Multi pole integration products

5G

MULTI-FUNCTIONAL INTELLIGENT LAMP POLE

- Saving urban space, realizing multi-pole integration
- Beautifying urban environment, upgrading urban image
- Owners'construction costs are reduced substantially
- Intelligent urban function interface and 5G base station interface are reserved
- One-time pipe network is reserved, avoid repeated excavation later